אוניברסיטת בן-גוריון בנגב
Ben-Gurion University of the Negev

Toward Self-Stabilizing Operating Systems

Shlomi Dolev and Reuven Yagel

Computer Science Department,

Ben-Gurion University of the Negev and Rafael

24-Nov-2003

Talk Outline

- Self-stabilization and motivation for self-stabilizing operating systems
- Current operating systems do not stabilize!
- Black box solutions
- A self-stabilizing tiny **OS**

Self-Stabilization

- The combination and type of faults cannot be totally anticipated in an on-going systems
- Any on-going system must be self stabilizing (or manually monitored)
- A self-stabilizing system is a system that can automatically recover following the occurrence of (transient) faults

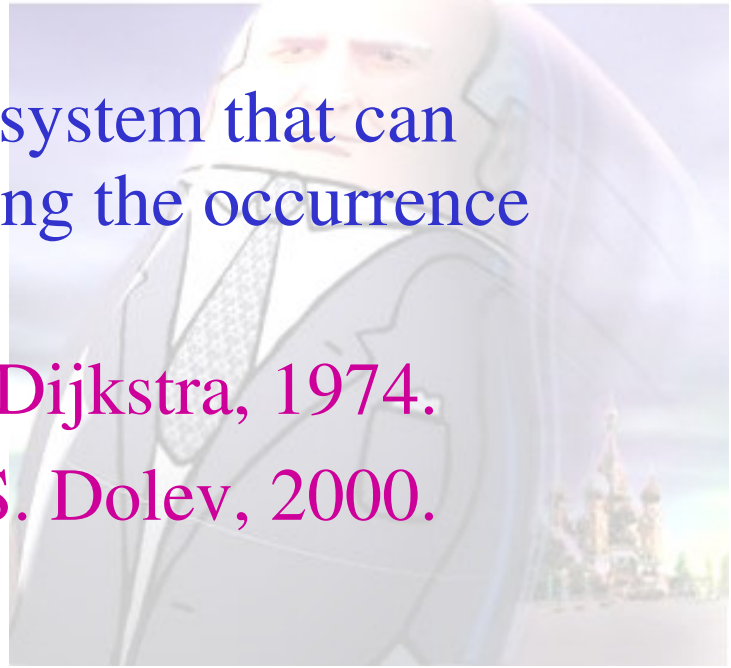

E. Dijkstra, 1974.

S. Dolev, 2000.

Windows

A fatal exception 0E has occurred at 0028:C0011E36 in VXD VMM(01) + 00010E36. The current application will be terminated.

* Press any key to terminate the current application.
* Press CTRL+ALT+DEL again to restart your computer. You will lose any unsaved information in all applications.

Press any key to continue _

Unix-Linux-Windows-DOS do not Stabilize

- Fernando J. Corbató , "It almost goes without saying that ambitious systems never quite work as expected“ http://larch-www.lcs.mit.edu:8001/~corbato/turing91/
- "You must pay extreme attention to detail here. One wrong bit will make things fail. Protected mode errors often triple-fault the CPU, making it reset itself. Be prepared to see this happen again and again." http://my.execpc.com/~geezer/os/pm.htm

Unix-Linux-Windows-DOS do not Stabilize

BSOD

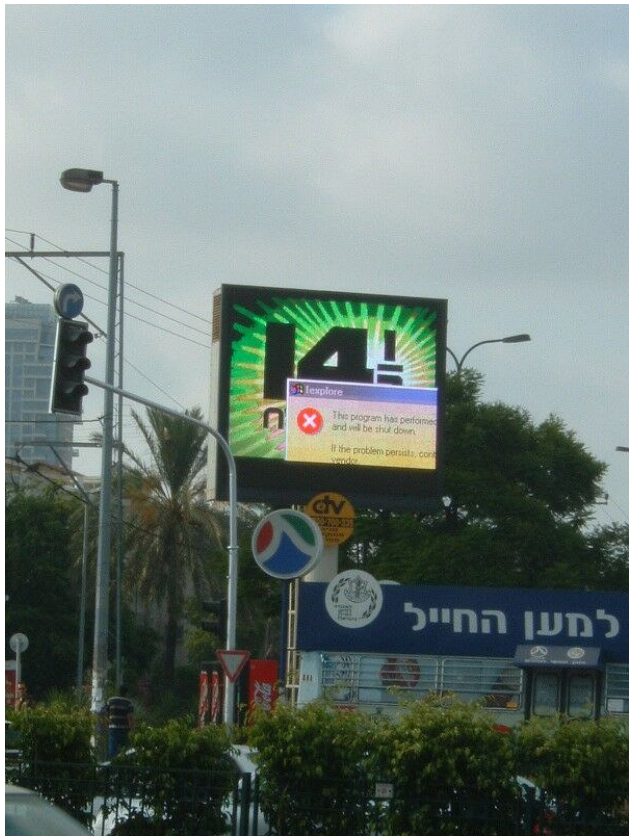

Hardware Support?

From Pentium's manual:

- "In the real-address mode, if the ESP or SP register is 1 when the PUSH instruction is executed, the processor shuts down due to a lack of stack space. No exception is generated to indicate this condition"
- "During NMI handler, further NMI are discarded, until the IRET instruction is executed", "NMI is normally enabled"
- Memory management registers: GDTR, LDTR and IDTR

Goal: Autonomic Computer

- Following any sequence of transient faults, soft-errors ("98% of RAM errors are soft errors"), wrong crc during communication etc. the system converges
- Self Stabilization
  - System can be started in an arbitrary state and converge to a desired behaviour
  - Traditionally used in distributed systems (where transient faults are frequent)
  - Cannot run self-stabilizing algorithms unless hardware+OS are stabilizing (Fair composition [Dolev2K,DH03])
- Hence achieved: self-healing, automatic recovery, adaptive systems, …

Related Projects

- Autonomic Computing, IBM
- Recovery Oriented Computing, Berkeley-Stanford

- Self-stabilizing Micro-processor , BGU
- …
- Self-stabilizing Autonomic Recoverer , BGU

What is an Operating System?

From "Operating System Concepts", Silbershatz et. al.:

- Resource allocator – manages and allocates resources
- Control program – controls the execution of user programs and operations of I/O devices
- Kernel – the one program running at all times (all else being application programs)

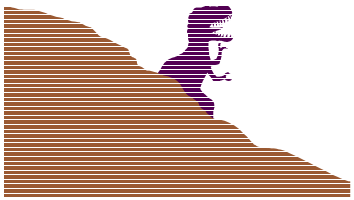

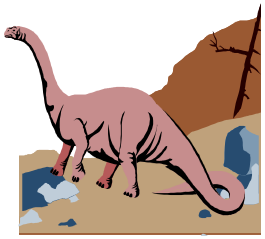

Stabilization Scenario

- Some device driver is not functioning
- Program asking for service again? Some manual reset? Machine restart?

- Define system states <s> (variable assignments) which form legal states (e.g., of the driver). The OS will eventually reach such states

Operating System

- Main OS (black-box):
  - UNIX family, Windows, RTOS
- Three main parts of a kernel (tailored):
  - Processor scheduling
  - Memory management
  - Device allocation

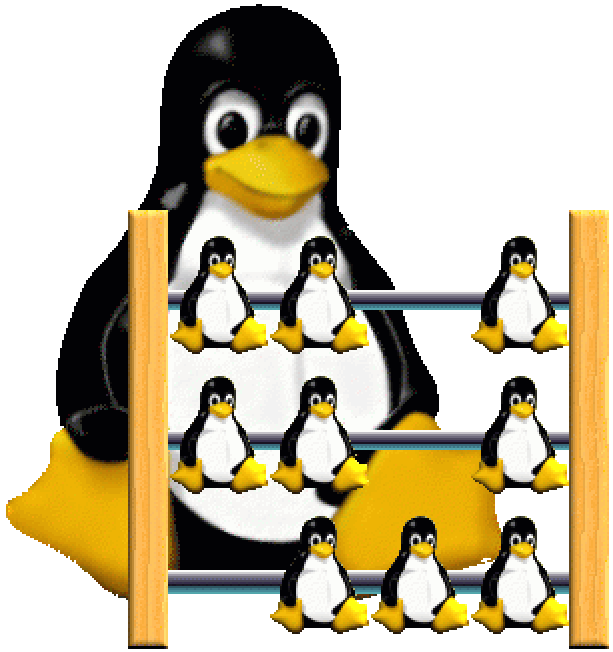

Hardware Platform

- IA-32 (Pentium) Architecture
  - CPU modes (real, protected, …)
  - Interrupts: INTR + NMI pins, soft int, faults
- Additional watchdog device
  - Machine restart
  - Recovery Monitor in ROM [Castro & Liskov, 2000]
  - OS Re-install & Repair
- Harvard model (data - program separated)

Black Box 1: Periodic Reset Re-install and Execute

- Watchdog timer (Self-stabilizing)
- Periodic processor reset
- OS code copy from ROM to RAM during bootstraps

- Is it always acceptable?

Black Box 2: Periodic Re-install and Continue Execute

- OS code (partially) re-install only – “hot boot”
- Watchdog
- Really non-maskable interrupt
  - Limit the option to mask NMI
  - NMI vector hardwired

- What about data consistency?

Black Box 3: Monitor and Establish Consistency

- Consistency check & establishment
- (Hierarchical) boots if needed

Tiny OS Scheduler

- Activation and full execution no matter what the system state is
- Task counter increments mod N
- Monitoring of next task's validity, e.g., PC in limits

```
; save task state
10 mov word ax, [currentTask]
11 and ax, MASK TASK
12 lea bx, [taskSegment]
13 mov ah, TASK ENTRY SIZE
14 mul ah
15 add bx, ax
16 mov bp, sp
17 mov ax, [bp+22]
18 mov word [bx], ax
19 mov ax, [bp+20] ;save cs
20 mov word [bx+2], ax
21 mov ax, [bp+18] ;save ip
22 mov word [bx+4], ax
```

```
VGA BIOS - Version 2.40
Copyright (C) 1990-2000 Elpin Systems, Inc.
All rights reserved.

Licensed for use with bochs, courtesy of MandrakeSoft.

For information on this or other VGA development products, contact
Elpin Systems at: (800) 723-9038 or www.elpin.com
```

```
VGA BIOS - Version 2.40
Copyright (C) 1990-2000 Elpin Systems, Inc.
All rights reserved.

Licensed for use with bochs, courtesy of MandrakeSoft.

For information on this or other VGA development products, contact
Elpin Systems at: (800) 723-9038 or www.elpin.com

Bochs BIOS, 1 cpu, $Revision: 1.85.2.1 $ $Date: 2003/01/16 21:58:42 $


Booting from Floppy...

Loading Boot Image
...............
..................
....
Starting to load Self-Stabilizing OS.

Welcome to SIMPLIX.

_
```

```
Booting from Floppy...

Loading Boot Image
...............
...................
....
Welcome to SIMPLIX.
Loading OS interrupt handlers at address 20000 (ROM!)
Loading task code at address 10000
Installing interrupt handlers at addresses 0x20(=0x8X4), 0x70(=0x1CX4) (ROM!)
Jumping to first task code at address 10000



  0) Everything should be made as simple as possible, but no simpler. (Einstein)
```

```
Booting from Floppy...

Loading Boot Image
...............
...................
....
Welcome to SIMPLIX.
Loading OS interrupt handlers at address 20000 (ROM!)
Loading task code at address 10000
Installing interrupt handlers at addresses 0x20(=0x8X4), 0x70(=0x1CX4) (ROM!)
Jumping to first task code at address 10000



          Sceduler switches to next task, counter= 19


  0) Everything should be made as simple as possible, but no simpler. (Einstein)
  1) Keep It Simple, Stupid. (KISS engineers' principle)
  2) The unavoidable price of reliability is simplicity. (Hoare)
  3) What can be done with fewer ... is done in vain with more.(Ockham)
```

Tiny OS Scheduler

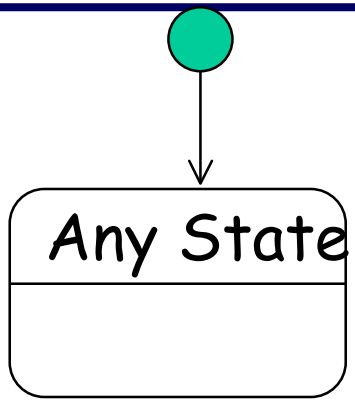

Tiny OS Scheduler

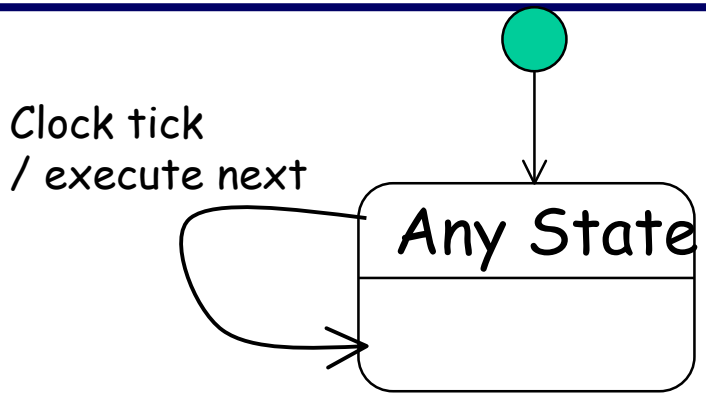

Tiny OS Scheduler

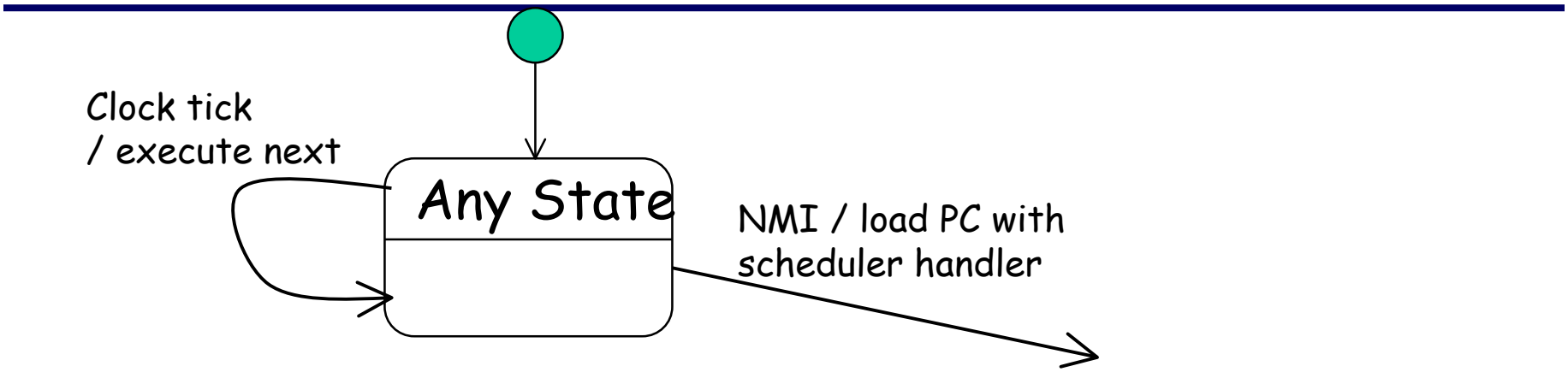

Tiny OS Scheduler

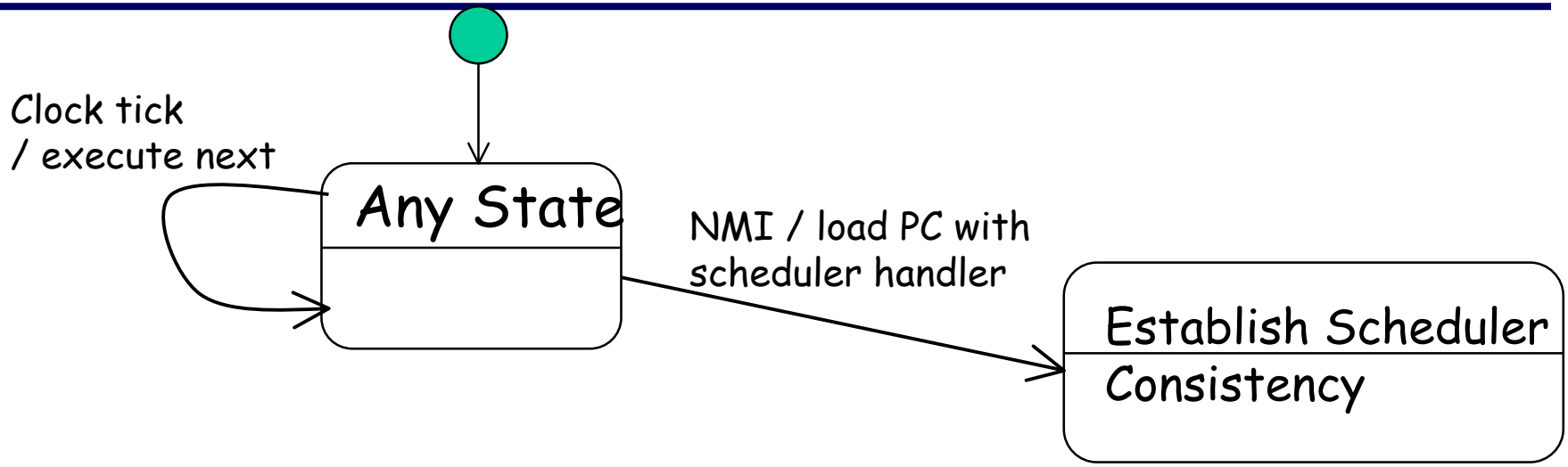

Tiny OS Scheduler

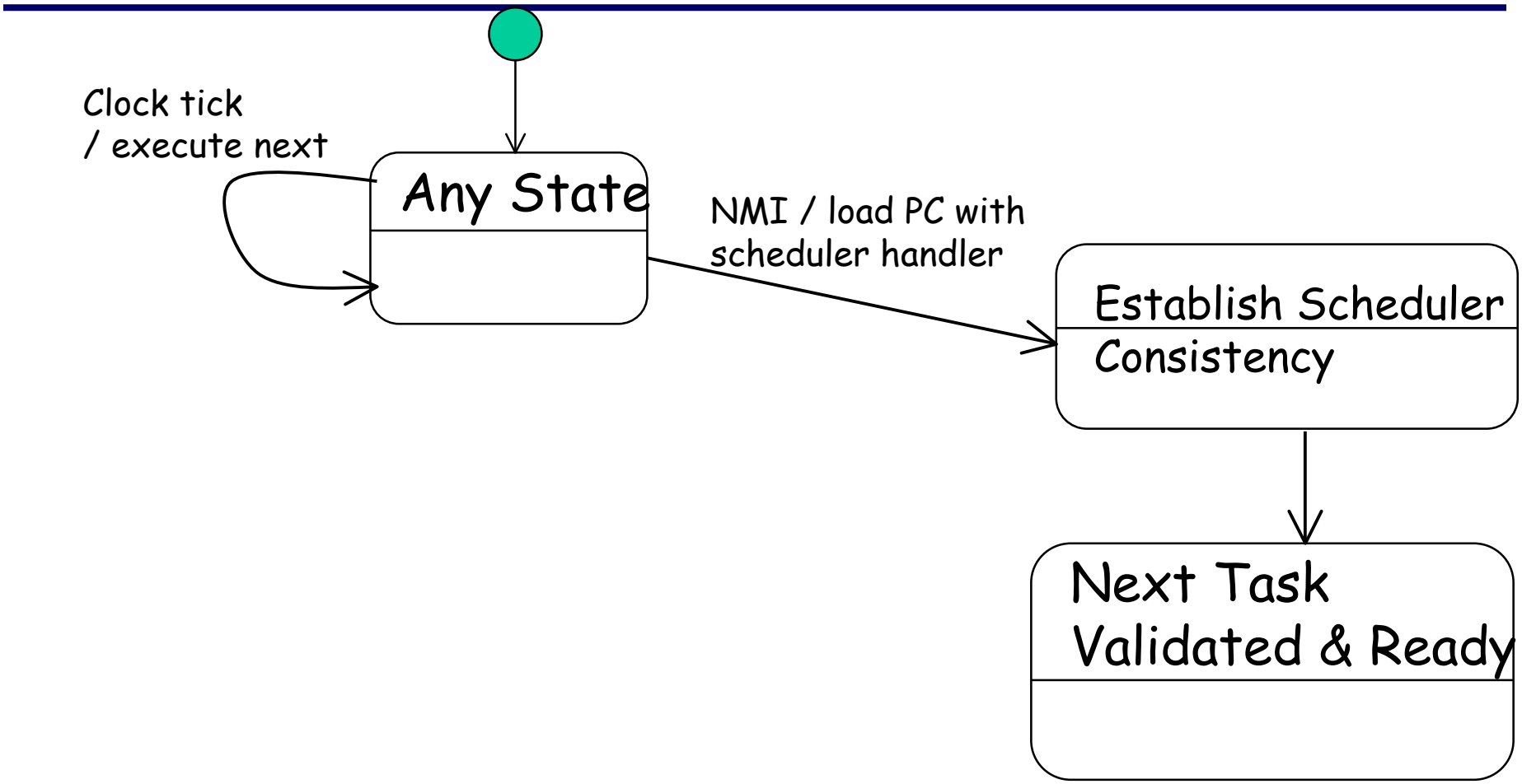

Tiny OS Scheduler

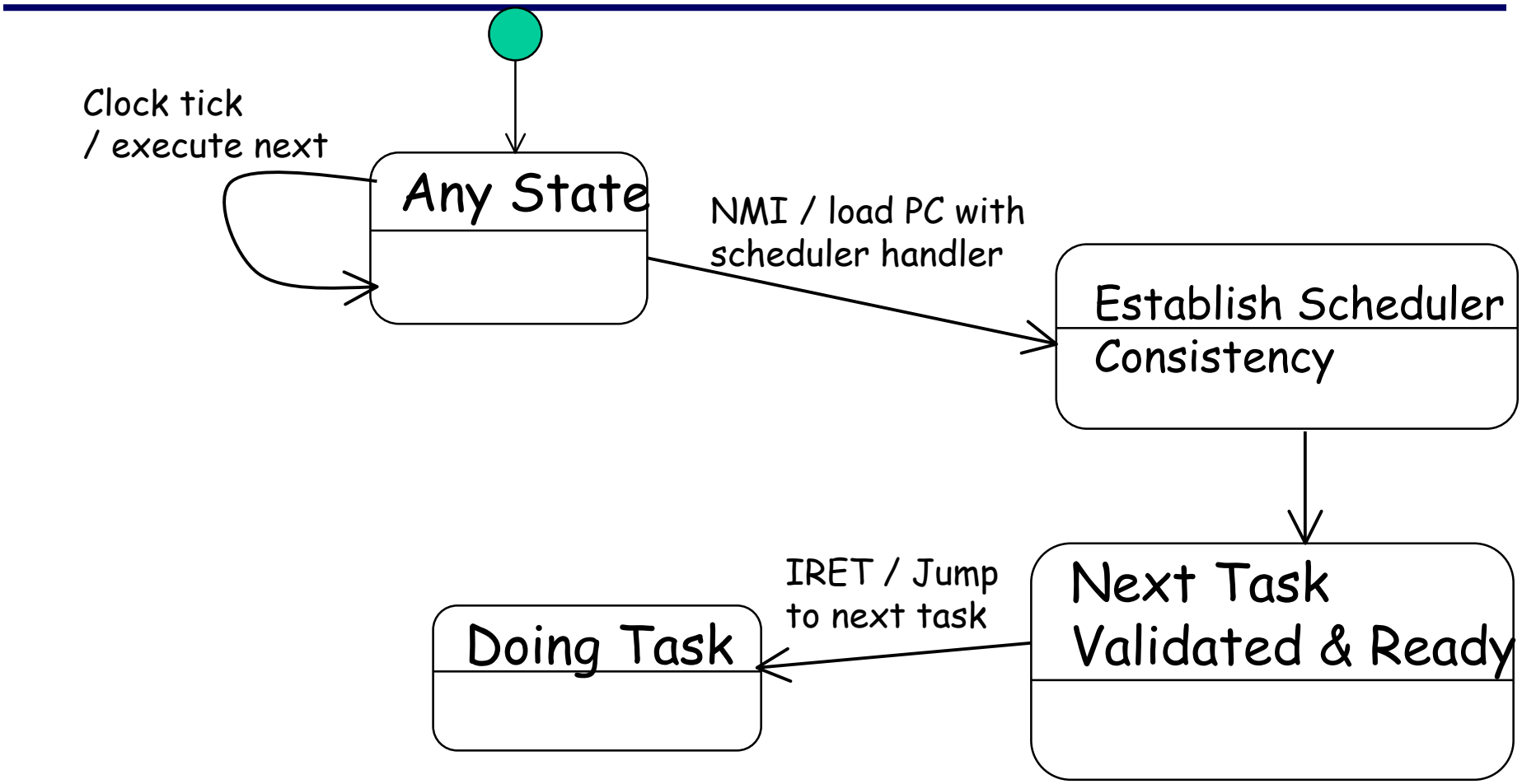

Tiny OS Scheduler

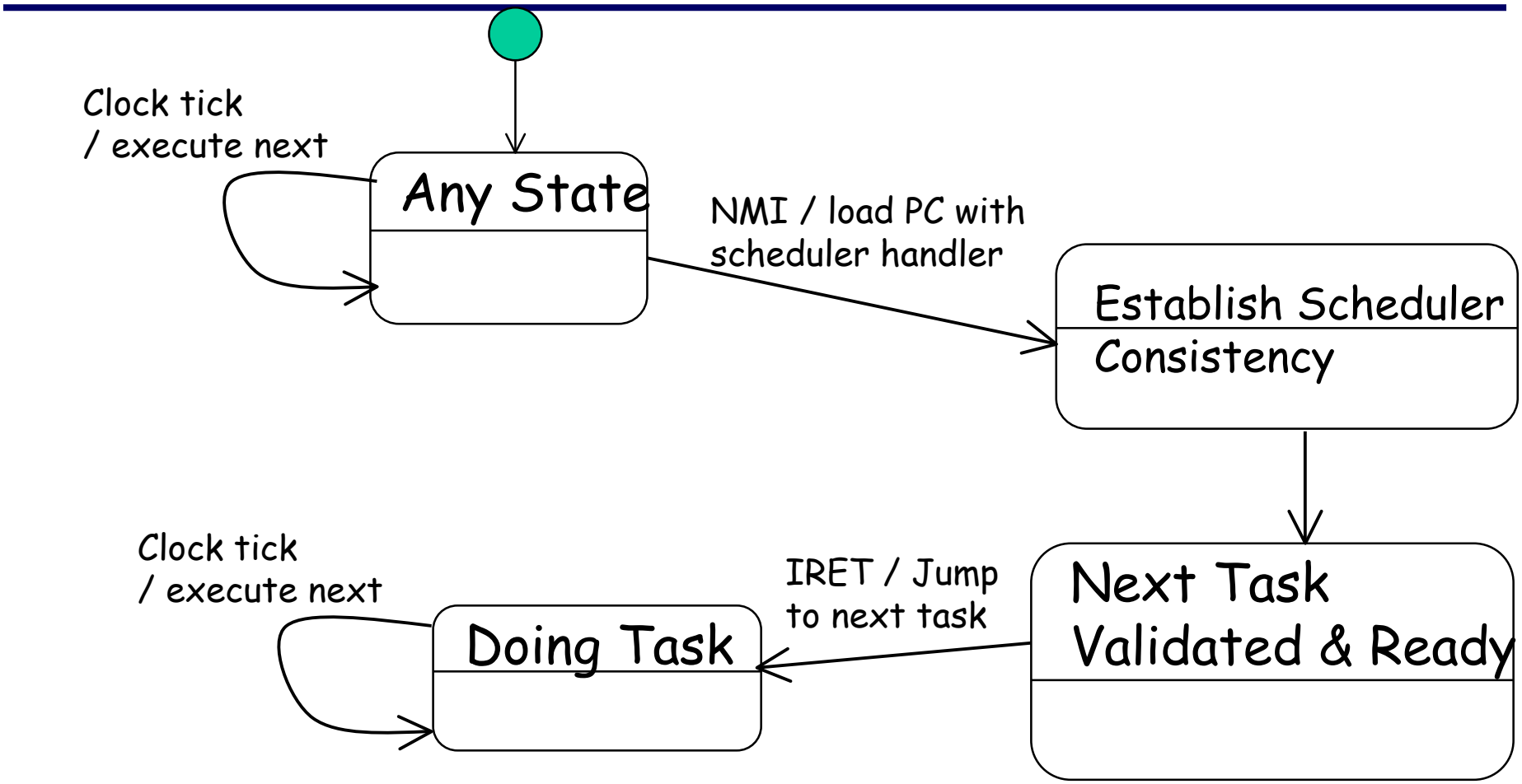

Tiny OS Scheduler

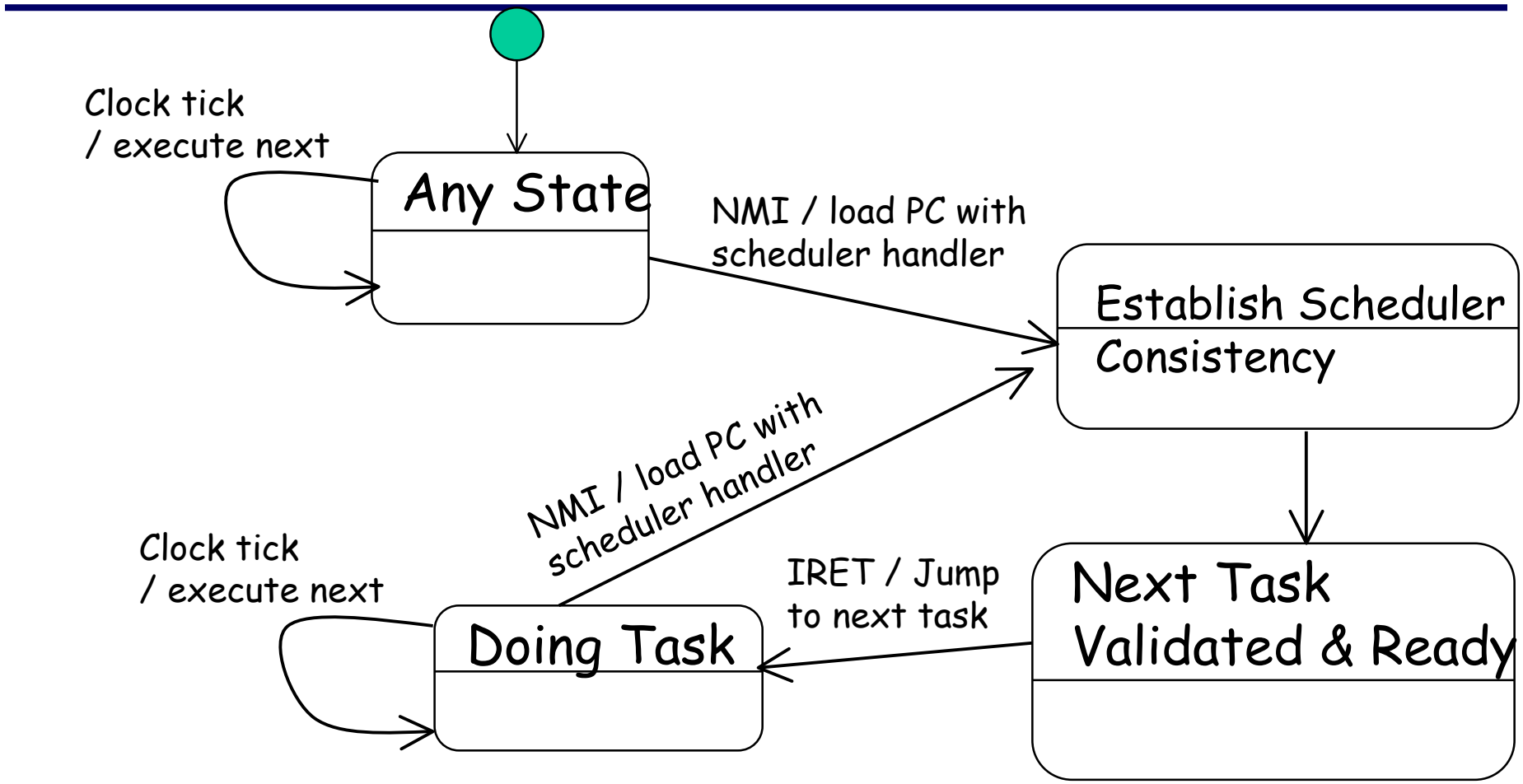

Tiny OS Scheduler

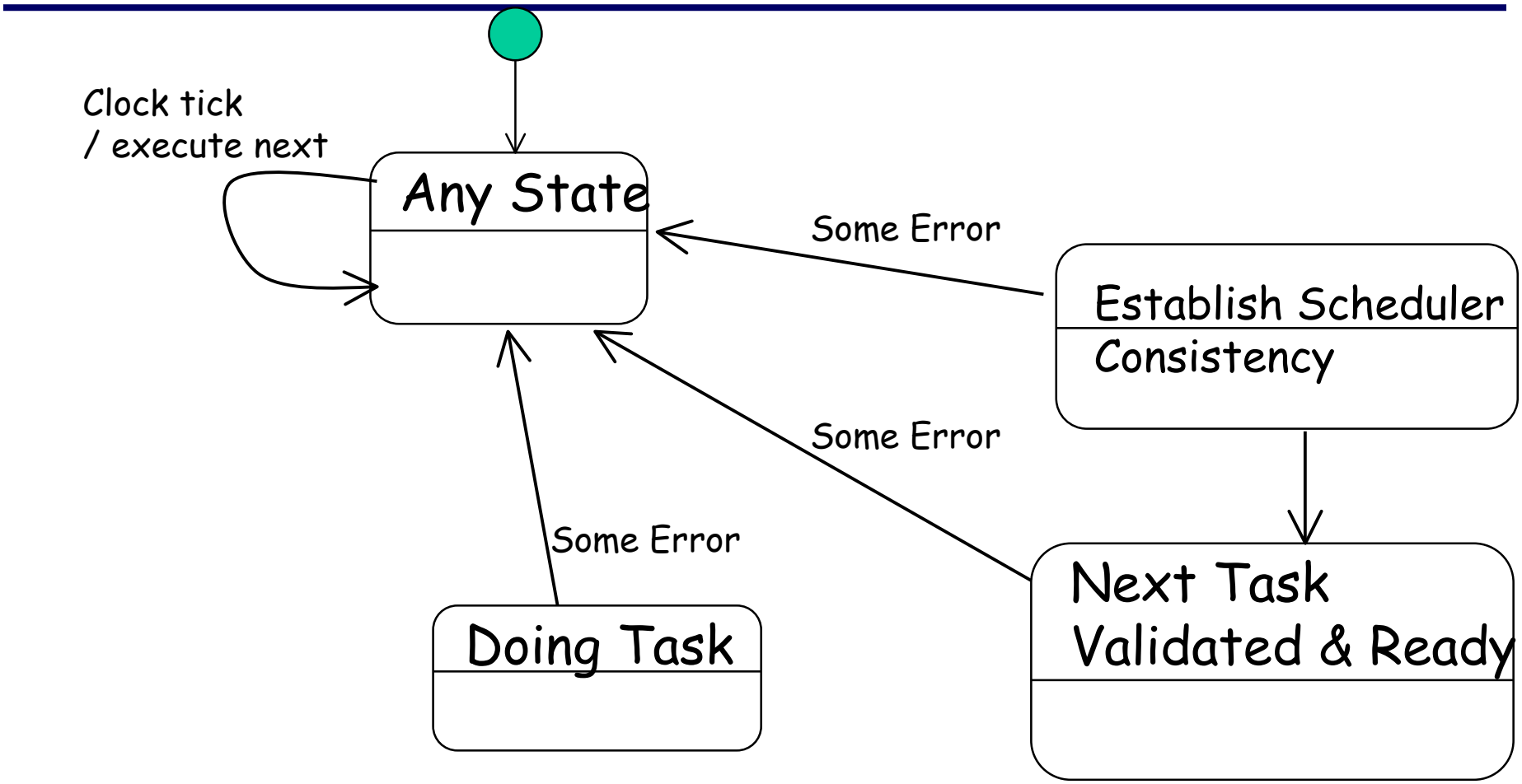

Tiny OS Scheduler

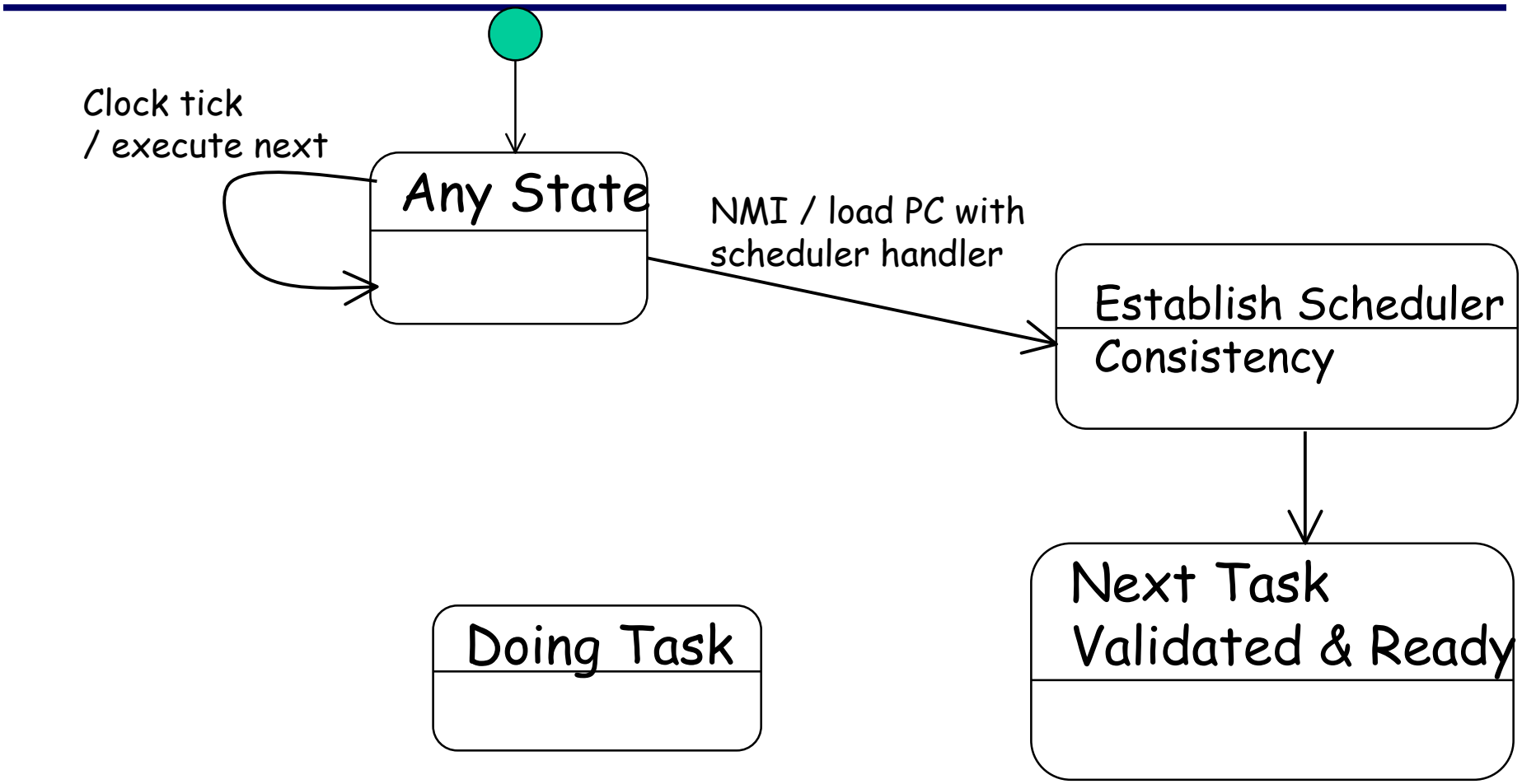

Conclusion

- Self-Stabilizing operating-system is a must and examples are well known
- We make the first steps forward this goal

Thank you